Cambridge International Examinations
Cambridge International General Certificate of Secondary Education

CANDIDATE NAME	
CENTRE NUMBER	
CANDIDATE NUMBER	

PHYSICS **0625/41**

Paper 4 Theory (Extended) **May/June 2018**

1 hour 15 minutes

Candidates answer on the Question Paper.

No Additional Materials are required.

READ THESE INSTRUCTIONS FIRST

Write your Centre number, candidate number and name on all the work you hand in.
Write in dark blue or black pen.
You may use an HB pencil for any diagrams or graphs.
Do not use staples, paper clips, glue or correction fluid.
DO **NOT** WRITE IN ANY BARCODES.

Answer **all** questions.
Electronic calculators may be used.
You may lose marks if you do not show your working or if you do not use appropriate units.
Take the weight of 1.0 kg to be 10 N (acceleration of free fall = 10 m / s^2).

At the end of the examination, fasten all your work securely together.
The number of marks is given in brackets [ ] at the end of each question or part question.

This syllabus is approved for use in England, Wales and Northern Ireland as a Cambridge International Level 1/Level 2 Certificate.

This document consists of **14** printed pages and **2** blank pages.

DC (CE/SW) 150767/5
© UCLES 2018

CAMBRIDGE International Examinations

[Turn over

www.root19.com +91 - 9969 353 391

1 Fig. 1.1 shows the speed-time graph for a vehicle accelerating from rest.

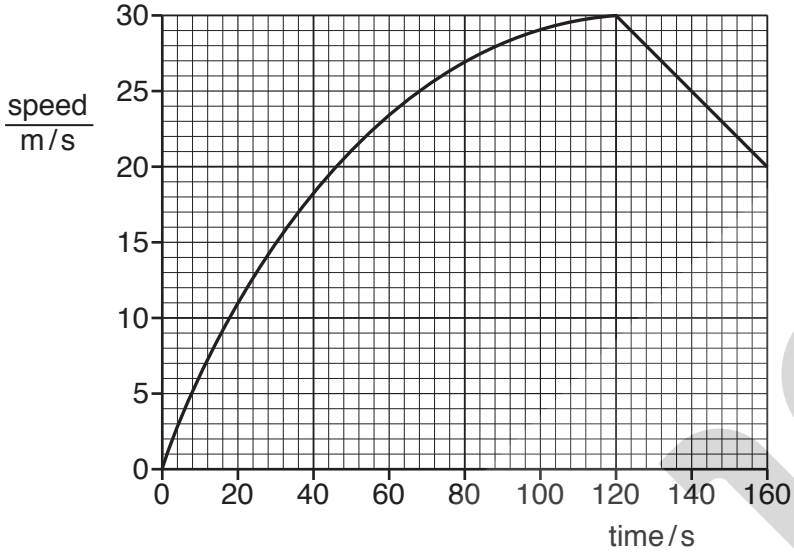

Fig. 1.1

(a) Calculate the acceleration of the vehicle at time = 30 s.

acceleration = ...[2]

(b) Without further calculation, state how the acceleration at time = 100 s compares to the acceleration at time = 10 s. Suggest, in terms of force, a reason why any change has taken place.

.....

.....

.....[3]

(c) Determine the distance travelled by the vehicle between time = 120 s and time = 160 s.

distance = ...[3]

[Total: 8]

www.root19.com +91 - 9969 353 391

2 Fig. 2.1 shows a fork-lift truck lifting a box.

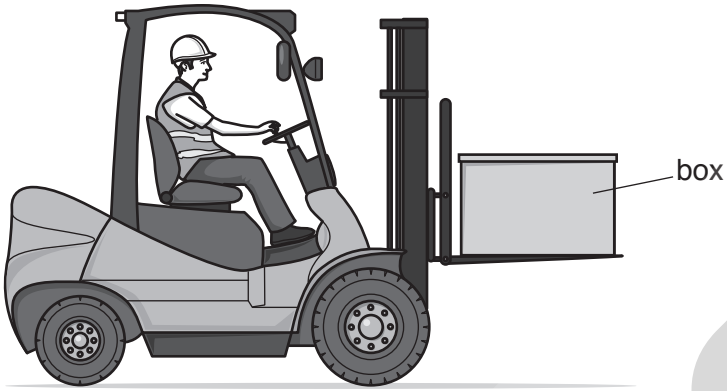

Fig. 2.1

The electric motor that drives the lifting mechanism is powered by batteries.

(a) State the form of the energy stored in the batteries.

.....[1]

(b) The lifting mechanism raises a box of mass 32 kg through a vertical distance of 2.5 m in 5.4 s.

(i) Calculate the gravitational potential energy gained by the box.

gravitational potential energy = ...[2]

(ii) The efficiency of the lifting mechanism is 0.65 (65%).

Calculate the input power to the lifting mechanism.

input power = ...[3]

(c) The batteries are recharged from a mains voltage supply that is generated in an oil-fired power station.

By comparison with a wind farm, state one advantage and one disadvantage of running a power station using oil.

advantage .....

.....

disadvantage .....

.....[2]

[Total: 8]

www.root19.com +91 - 9969 353 301

3 A rectangular container has a base of dimensions 0.12 m × 0.16 m. The container is filled with a liquid. The mass of the liquid in the container is 4.8 kg.

(a) Calculate

(i) the weight of liquid in the container,

weight = ...[1]

(ii) the pressure due to the liquid on the base of the container.

pressure = ...[2]

(b) Explain why the total pressure on the base of the container is greater than the value calculated in **(a)(ii)**.

.....

.....[1]

(c) The depth of liquid in the container is 0.32 m.

Calculate the density of the liquid.

density = ...[2]

[Total: 6]

© UCLES 2018
www.root19.com

+91 - 9969 353 391

4 **(a)** Describe the movement of the molecules in

(i) a solid,

.....

.....[1]

(ii) a gas.

.....

.....[2]

(b) A closed box contains gas molecules.

Explain, in terms of momentum, how the molecules exert a pressure on the walls of the box.

.....

.....

.....

.....

.....

.....[4]

[Total: 7]

© UCLES 2018
www.root19.com

+91 - 9969 353 301

5 **(a)** A ray of light in air is incident on a glass block. The light changes direction.

State

(i) the name of this effect,

.....[1]

(ii) the cause of this effect.

.....[1]

(b) Fig. 5.1, drawn to full scale, shows a thin converging lens of focal length 3.5 cm.

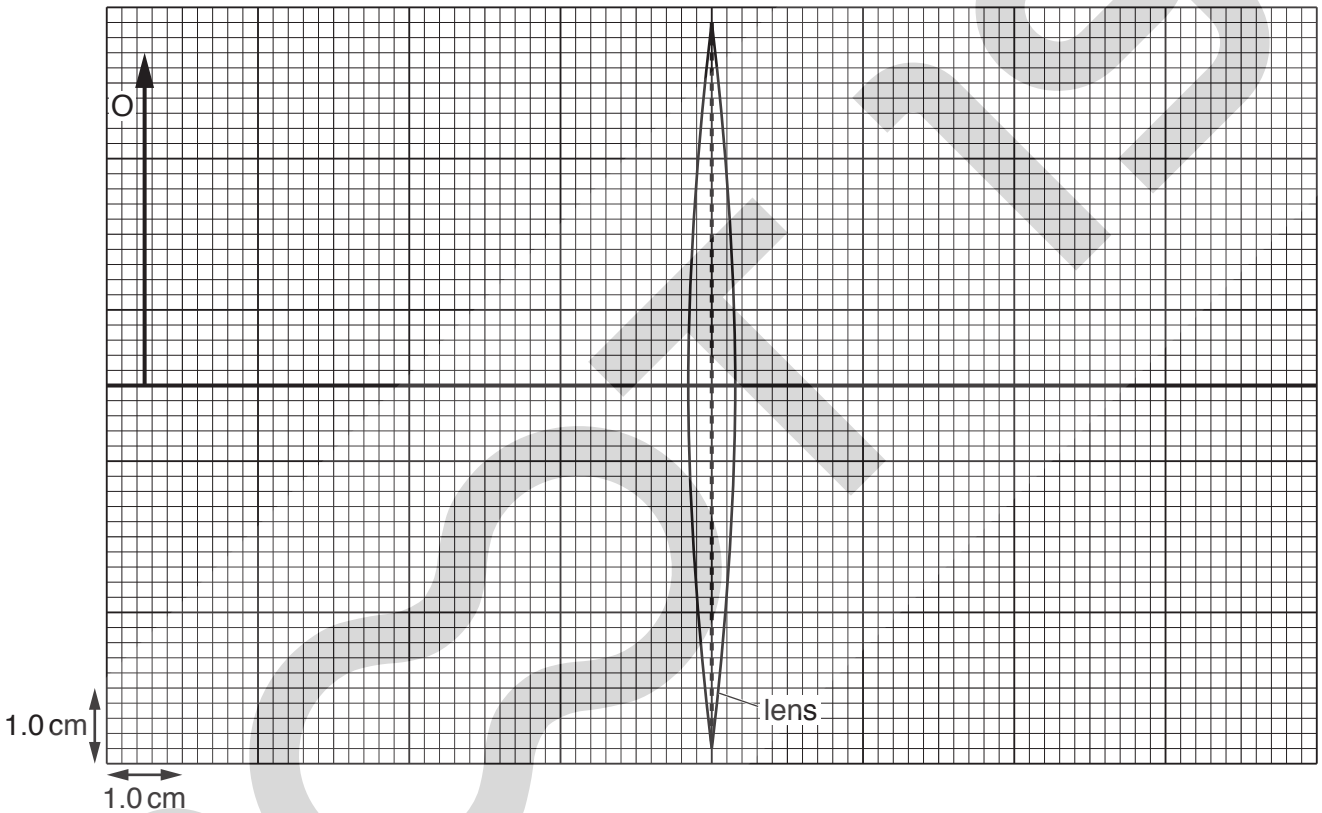

Fig. 5.1

(i) On Fig. 5.1, mark each of the two principal focuses and label each with the letter F. [1]

(ii) An object O of height 4.4 cm is placed a distance of 7.5 cm from the lens.

On Fig. 5.1, draw rays from the tip of the object O to locate the image. Draw and label the image. [3]

(iii) Determine the height of the image.

height of the image = ...[1]

(iv) State and explain whether the image is real or virtual.

.....

.....[1]

[Total: 8]

www.root19.com +91 - 9969 353 391

6 **(a)** Fig. 6.1 shows wavefronts approaching a gap in a barrier.

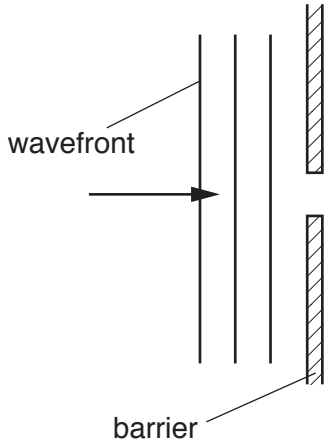

Fig. 6.1

(i) On Fig. 6.1, draw **three** wavefronts to the right of the barrier. [2]

(ii) Fig. 6.2 shows the gap in the barrier increased to five times the gap in Fig. 6.1.

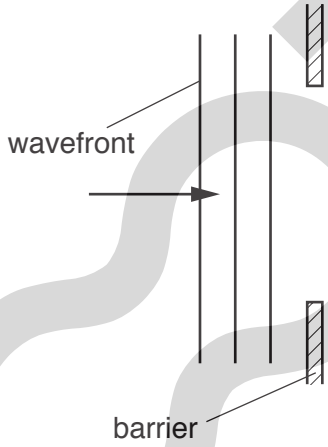

Fig. 6.2

On Fig. 6.2, draw **three** wavefronts to the right of the barrier. [2]

© UCLES 2018
www.root19.com

+91 - 9969 353 301

(b) Describe, with a labelled diagram, an experiment using water waves that shows the reflection of wavefronts that occur at a straight barrier.

.....

.....

.....

.....

.....

.....[4]

[Total: 8]

© UCLES 2018
www.root19.com

+91 - 9969 353 391

BLANK PAGE

© UCLES 2018
www.root19.com

+91 - 9969 353 301

7 **(a)** State, in terms of their structure, why metals are good conductors of electricity.

.....

.....[1]

(b) A cylindrical metal wire W_1, of length l and cross-sectional area A, has a resistance of 16 Ω.

A second cylindrical wire W_2 having length $\frac{l}{2}$ and cross-sectional area $2A$, is made from the same metal.

Determine

(i) the resistance of W_2,

resistance of W_2 = ...[2]

(ii) the effective resistance of W_1 and W_2 when connected in parallel.

resistance of parallel pair = ...[2]

(c) The parallel pair of resistors in **(b)(ii)** is connected to a battery that is made from three cells in series, each of electromotive force (e.m.f.) E. There is a current in each resistor.

(i) State the e.m.f. of the battery.

.....[1]

(ii) The current in the battery is I_B, the current in W_1 is I_1 and the current in W_2 is I_2.

Place a tick (✓) in **one** box to indicate how these three currents are related.

- ☐ $I_1 > I_2 > I_B$
- ☐ $I_1 > I_B > I_2$
- ☐ $I_2 > I_1 > I_B$
- ☐ $I_2 > I_B > I_1$
- ☐ $I_B > I_1 > I_2$
- ☐ $I_B > I_2 > I_1$
- ☐ $I_1 = I_2 = I_B$

[1]

[Total: 7]

www.root19.com +91 - 9969 353 391

8 In a laboratory at normal room temperature, 200 g of water is poured into a beaker. A thermometer placed in the water has a reading of 22 °C.

Small pieces of ice at 0 °C are added to the water one by one. The mixture is stirred after each addition until the ice has melted. This process is continued until the temperature recorded by the thermometer is 0 °C.

The total mass of ice added to the water is found to be 60 g.

(a) The specific heat capacity of water is 4.2 J/(g °C).

Calculate the thermal energy lost by the water originally in the beaker.

thermal energy = ...[2]

(b) Assume that all the thermal energy lost by the water originally in the beaker is transferred to the ice.

Calculate the specific latent heat of fusion of ice.

specific latent heat of fusion of ice = ...[2]

(c) Suggest a reason for any inaccuracy in the value of the specific latent heat of fusion of ice calculated in **(b)**. Assume the temperature readings and the values for the mass of the water and the mass of the ice are accurate.

.....

.....[1]

[Total: 5]

© UCLES 2018
www.root19.com

+91 - 9969 353 301

9 **(a)** A student wants to demagnetise a permanent bar magnet. She suggests these steps:

1. Place the magnet in a long coil.
2. Switch on a large alternating current in the coil.
3. Switch off the current.
4. Remove the bar from the coil.

State and explain whether the steps will always be able to demagnetise the magnet.

.....

.....

.....

.....[3]

(b) **(i)** Fig. 9.1 shows a coil supplied with current using a split-ring commutator.

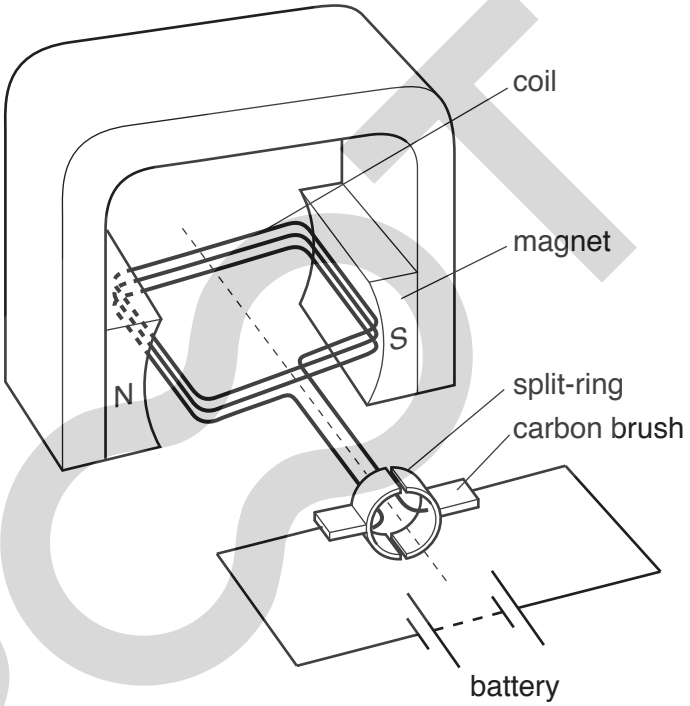

Fig. 9.1

State and explain any motion of the coil.

.....

.....

.....

.....

.....[3]

www.root19.com +91 - 9969 353 391

(ii) The coil in Fig. 9.1 consists of three turns of wire. The magnetic field strength of the magnet is *M*. With a current of 2.0 A in the coil, the coil experiences a turning effect *T*.

The first row of Table 9.1 shows this data.

Table 9.1

number of turns	current in the coil / A	magnetic field strength	turning effect
3	2.0	M	T
3	8.0	M	
6	2.0	M	
3	2.0	$\frac{M}{2}$	

Complete Table 9.1 to give the turning effect for the changes made to the arrangement shown in Fig. 9.1. Choose your answers from the box.

$\frac{T}{8}$	$\frac{T}{4}$	$\frac{T}{2}$	T	$2T$	$4T$	$8T$

[3]

[Total: 9]

© UCLES 2018

www.root19.com +91 - 9969 353 301

10 **(a)** Explain why the voltage of the supply to the primary coil of a transformer must be alternating.

.....

.....

.....

.....[2]

(b) Fig. 10.1 shows a transformer.

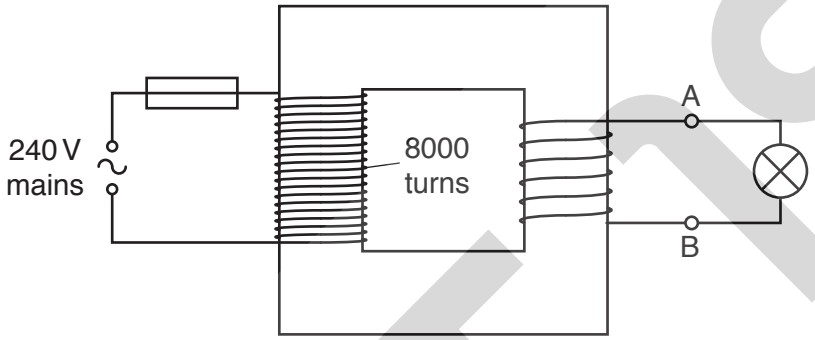

Fig. 10.1

There are 8000 turns in the primary coil of the transformer. The primary coil is connected to a 240 V mains supply. A 6.0 V lamp connected to the secondary coil operates at full brightness.

(i) Calculate the number of turns in the secondary coil,

number of turns = ...[2]

(ii) The current in the lamp is 2.0 A. The transformer operates with 100% efficiency.

Calculate the current in the primary circuit.

current = ...[2]

(iii) The primary circuit contains a 2 A fuse.

Calculate the maximum number of lamps, identical to the lamp in **(ii)**, that can be connected in parallel in the secondary circuit without blowing the fuse.

number of lamps = ...[1]

[Total: 7]

www.root19.com +91 - 9969 353 391

11 Radon-222 is radioactive. It can be represented as $^{222}_{86}Rn$.

(a) For a neutral atom of radon-222, state

1. the number of protons, ...

2. the number of neutrons, ...

3. the number of electrons. .....

[2]

(b) A radon-222 nucleus decays by α-particle emission to a polonium (Po) nucleus.

Complete the equation for the decay of radon-222.

$$^{222}_{86}Rn \rightarrow$$ [2]

(c) Radon-222 has a half-life of 3.8 days.

At a certain time, a sample contains 6.4×10^6 radon nuclei.

Calculate the number of α-particles emitted by the radon nuclei in the following 7.6 days.

number = ...[3]

[Total: 7]

© UCLES 2018
www.root19.com

+91 - 9969 353 391

BLANK PAGE

Permission to reproduce items where third-party owned material protected by copyright is included has been sought and cleared where possible. Every reasonable effort has been made by the publisher (UCLES) to trace copyright holders, but if any items requiring clearance have unwittingly been included, the publisher will be pleased to make amends at the earliest possible opportunity.

To avoid the issue of disclosure of answer-related information to candidates, all copyright acknowledgements are reproduced online in the Cambridge International Examinations Copyright Acknowledgements Booklet. This is produced for each series of examinations and is freely available to download at www.cie.org.uk after the live examination series.

Cambridge International Examinations is part of the Cambridge Assessment Group. Cambridge Assessment is the brand name of University of Cambridge Local Examinations Syndicate (UCLES), which is itself a department of the University of Cambridge.

www.root19.com +91 - 9969 353 391